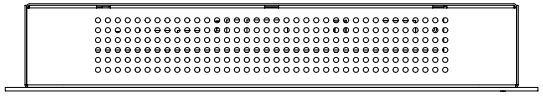

Top View

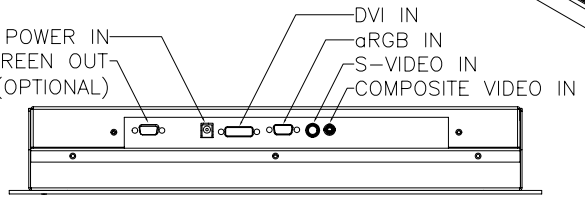

Bottom View

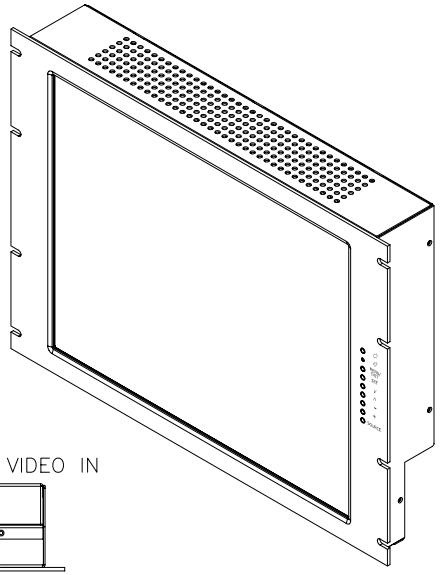

Isometric View

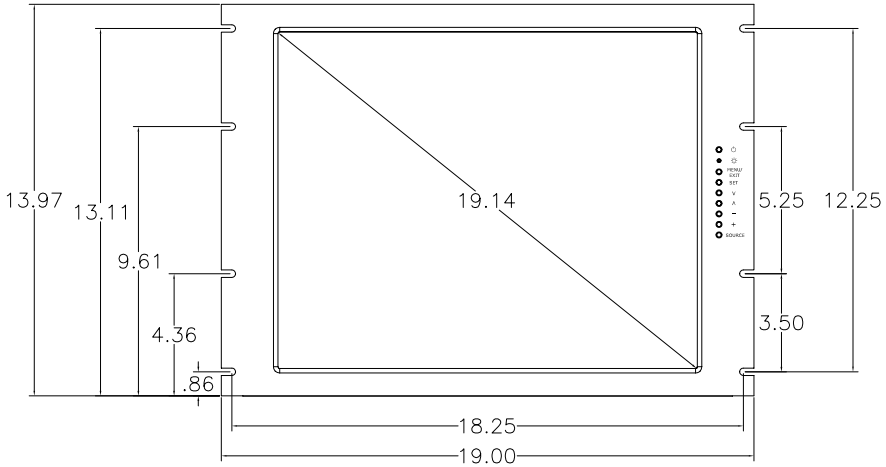

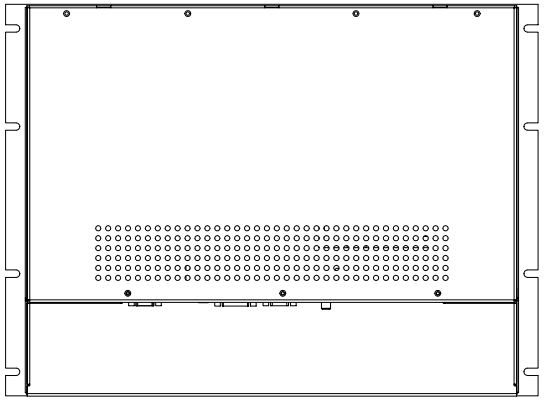

Back View

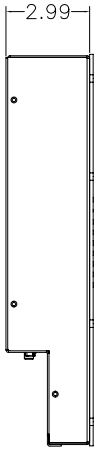

Side View

CHASSIS PLANS

8295 Aero Place
San Diego, CA 92123
(858) 571-4330
www.chassisplans.com

THE INFORMATION CONTAINED IN THIS DOCUMENT IS THE SOLE PROPERTY OF CHASSIS PLANS, LLC., IS COPYRIGHTED, AND IS SUBJECT TO WRITTEN CONFIDENTIALITY AND NON-DISCLOSURE AGREEMENTS. THIS INFORMATION INCLUDING MODIFICATION OF THIS DOCUMENT IS CONFIDENTIAL AND PROPRIETARY TO CHASSIS PLANS, LLC. THIS DRAWING MAY NOT BE DISCLOSED TO THIRD PARTIES INCLUDING VENDORS OR OTHER SUPPLIERS WITHOUT EXPRESS WRITTEN PERMISSION OF CHASSIS PLANS, LLC. REPRODUCTION IN ANY FORM OR MEANS, MECHANICAL, INCLUDING PHOTOCOPYING OR BY ANY INFORMATION STORAGE AND RETRIEVAL SYSTEM WITHOUT THE EXPRESS WRITTEN PERMISSION OF CHASSIS PLANS, LLC., IS A VIOLATION OF STATE AND FEDERAL STATUTES AND WILL SUBJECT THE VIOLATOR TO MONETARY DAMAGES.
©CHASSIS PLANS, LLC. 2005

UNLESS OTHERWISE SPECIFIED DIMENSIONS ARE IN INCHES.
TOLERANCES ARE: DECIMALS .X ± .1 ANGLES
.XX ± .03 ± 0°30'
.XXX ± .010
SCALE: NONE

MATERIAL

FINISH

TITLE
CPPM-8U19
8U PANEL MOUNT 19" LCD
CUSTOMER DRAWING

PART NUMBER
CPPM-8U19 CUSTOMER DRAWING

FILE: CPPM-8U19 CUSTOMER DRAWING
DATE: 5/1/06
LAST EDIT DATE: 5/1/06
SHEET 1 OF 1