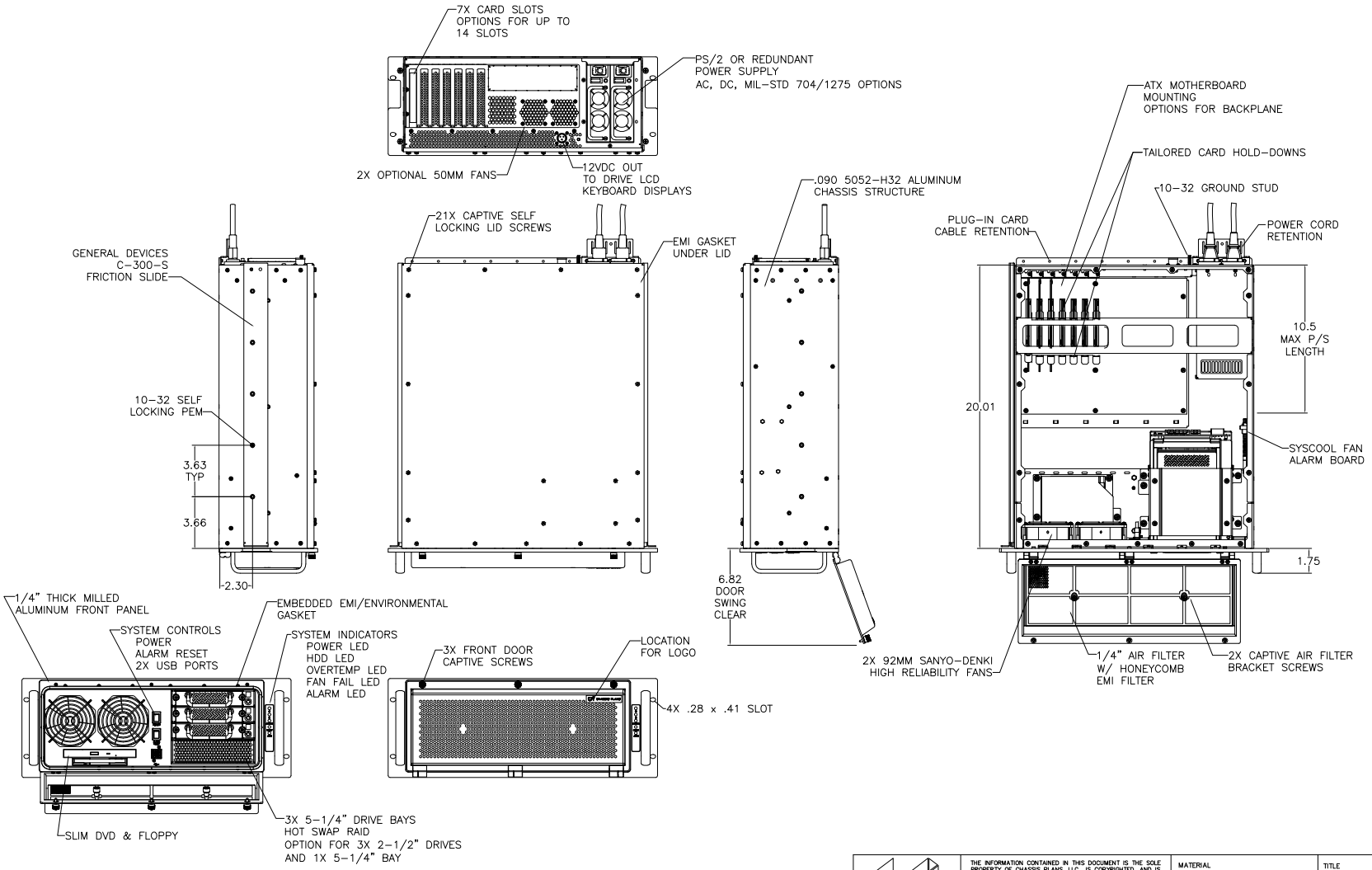

CHASSIS PLANS

1023 Carroll Canyon Rd.
San Diego, CA 92131
(858) 571-4330
www.chassis-plans.com

THE INFORMATION CONTAINED IN THIS DOCUMENT IS THE SOLE PROPERTY OF CHASSIS PLANS, LLC., IS COPYRIGHTED, AND IS SUBJECT TO WRITTEN CONFIDENTIALITY AND NON-DISCLOSURE AGREEMENTS. THIS INFORMATION INCLUDING MODIFICATION OF THIS DOCUMENT IS CONFIDENTIAL AND PROPRIETARY TO CHASSIS PLANS, LLC. THIS DRAWING MAY NOT BE DISCLOSED TO THIRD PARTIES INCLUDING VENDORS OR OTHER SUPPLIERS WITHOUT EXPRESS WRITTEN PERMISSION OF CHASSIS PLANS, LLC. REPRODUCTION IN ANY FORM OR MEANS, MECHANICAL, INCLUDING PHOTOCOPYING OR BY ANY INFORMATION STORAGE AND RETRIEVAL SYSTEM WITHOUT THE EXPRESS WRITTEN PERMISSION OF CHASSIS PLANS, LLC., IS A VIOLATION OF STATE AND FEDERAL STATUTES AND WILL SUBJECT THE VIOLATOR TO MONETARY DAMAGES.
©CHASSIS PLANS, LLC. 2011

UNLESS OTHERWISE SPECIFIED DIMENSIONS ARE IN INCHES.
TOLERANCES ARE: DECIMALS .X ± .1 ANGLES
.XX ± .03 ± 0°30'
.XXX ± .010
SCALE: NONE

MATERIAL

FINISH

TITLE
R4U-20A
RUGGED MIL GRADE 4U CHASSIS
CUSTOMER DRAWING

PART NUMBER
R4U-20A-CUSTOMER-DRAWING

FILE: R4U-20A-CUSTOMER-DRAWING
DATE: 11/1/11
LAST EDIT DATE: 11/18/11
SHEET 1 OF 1

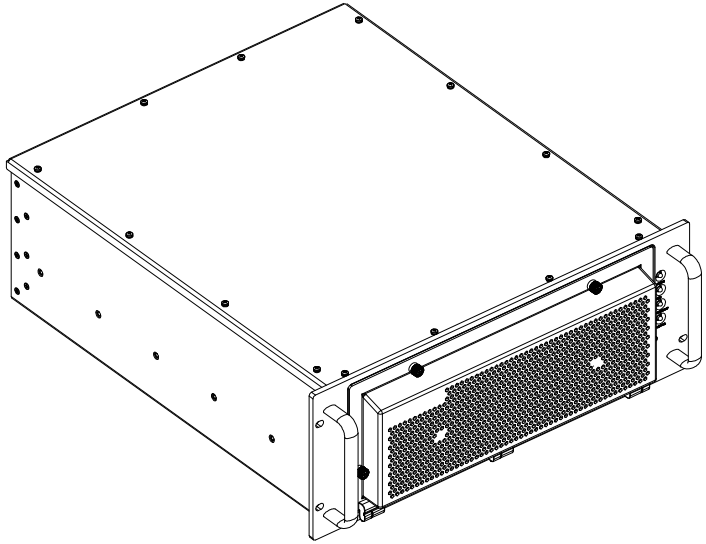

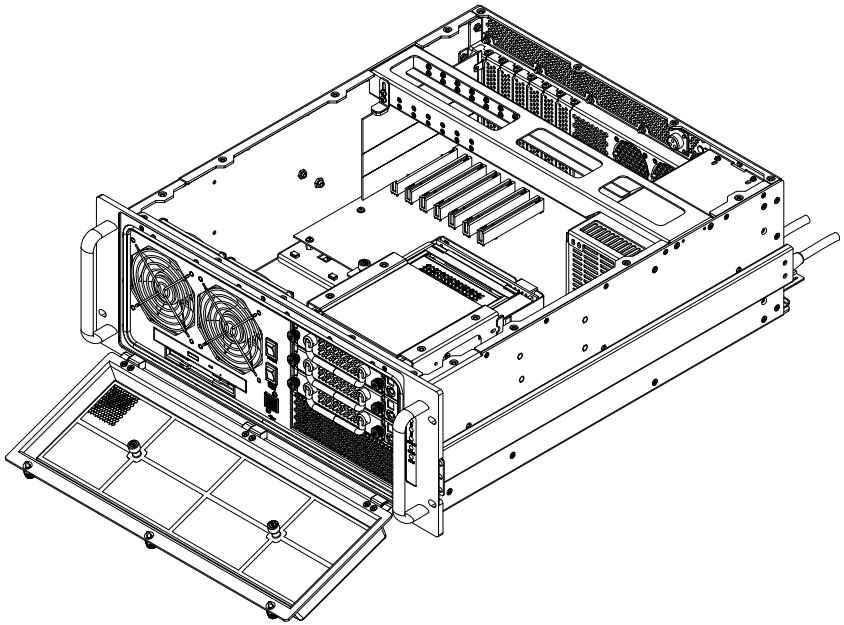

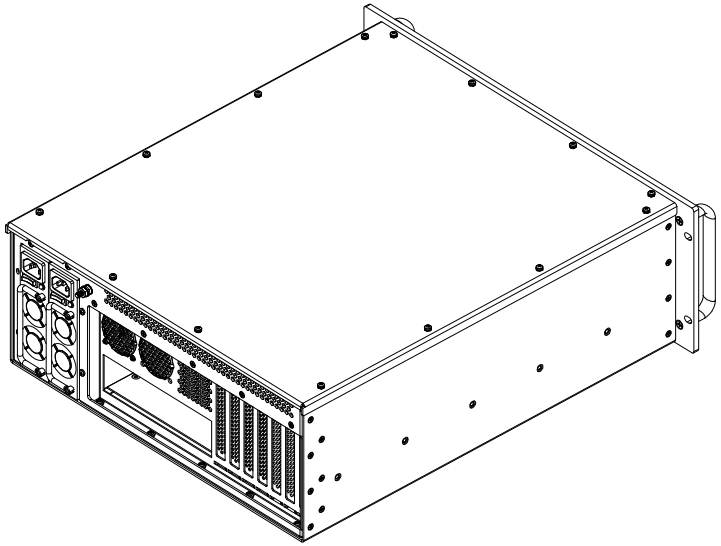

CHASSIS PLANS

PART NUMBER

R4U-20A_CUSTOMER_DRAWING

FILE: R4U-20A_CUSTOMER_DRAWING
DATE: 9-15-09

LAST EDIT DATE: 9-15-09

SHEET 2 OF 2